Manual Photography

You may override the AE mode and select the aperture and shutter speed manually. Simply set the shutter speed against the white line index mark and also set the lens aperture to the desired " f " stop.

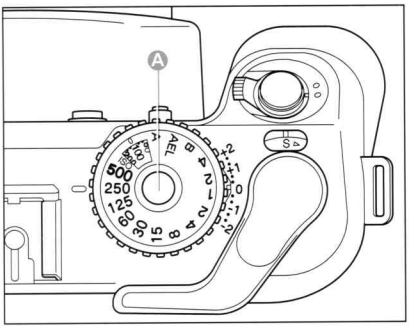

1. Release A•AEL.

For releasing, depress AE lock releasing button Ⓐ locating in the center of the shutter speed dial.

2. Set the shutter speed.

Rotate the shutter speed dial and align with index line of the camera body.

★ **While rotating the shutter speed dial click-stop functions at each step of engraved number but the intermediate shutter speed cannot be used.**

When using built-in exposure meter

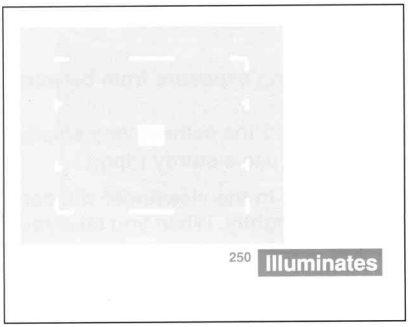

1. Half-pressing the shutter button.

When the shutter release button is touched gently, the selected shutter speed LED only will be continuously illuminated or another LED may also flash.

2. In the case where one shutter speed is lighting.

When the pre-selected shutter speed LED only illuminates, it indicates the shutter speed for correct exposure.

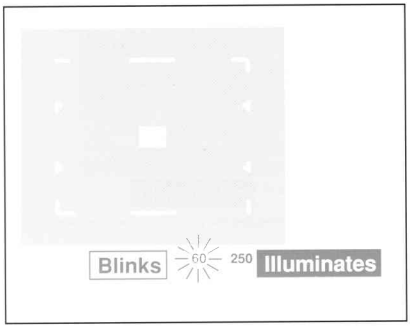

3. In the case where two shutter speeds (one is blinking) are displayed.

When the preselected shutter LED illuminates and one other LED blinks the blinking LED indicates the shutter speed for correct exposure.

Turn the shutter speed dial and/or aperture ring to align the two LEDs until merged. The single LED indicates correct shutter speed.

★ When on manual, 10 seconds after activation, the LED indicators will go out, to save battery power. If they do so during metering, press the Shutter Release Button half way again.

Please note:
The LED indicators will disappear 10 seconds after you remove your finger from the shutter release button in the following situations:
1) When the film advance lever is not advanced.
2) When the light shield curtain is closed.

Focusing the Lens

When the lens has been focused, the double image superimposing rangefinder produces two superimposed images with in the square □ of the viewfinder.

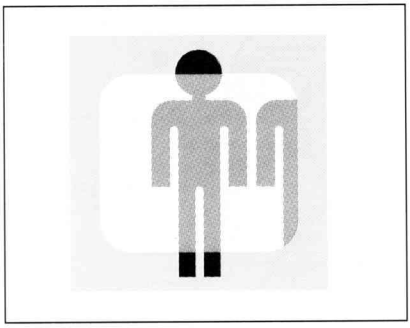

Focusing method within the double image coincidence zone

Position the subject within the central square a of the viewfinder. As on the top left the subject will appear as a double images.
Rotate the focusing ring until the two images converge and are superimposed as on the figure on the left. The lens is now focused.

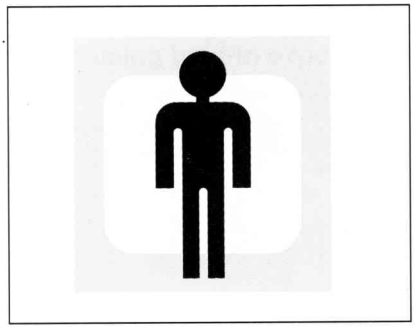

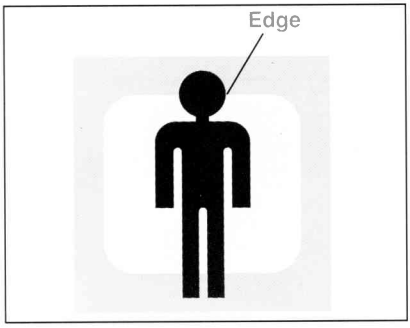

Focusing method at the edge of double image coincidence zone

Look the object through the rangefinder and rotate the focus ring so as to make two images into one without any imaginal slippage at the edge of the central double image coincidence zone. As this method improves the focusing preciseness, this is especially effective for N150 mm f/4.5 L lens.

Photographic area covered

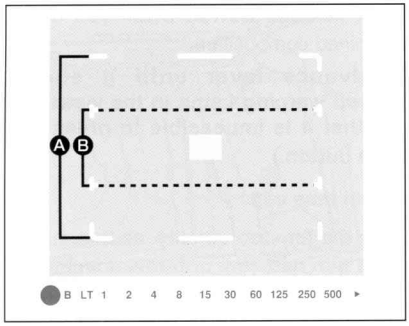

Within the viewfinder the subject area covered is indicated by the visible bright frame. Parallax is automatically compensated for according to the subject-to-lens distance.

The composition will be within in the lines of the bright frame Ⓐ for 6 x 7 format and Ⓑ for 135 panoramic format. 83% of the field of view is visible at ∞, and 100% is visible at the minimum focusing distance. The appropriate bright frame area is automatically indexed upon lens interchange.

However, for 43 mm, 50 mm lens, an exclusive viewfinder must be used. Also, for composition check purpose, an exclusive viewfinder for 150 mm lens is sold separately.

1. Pressing the shutter button.

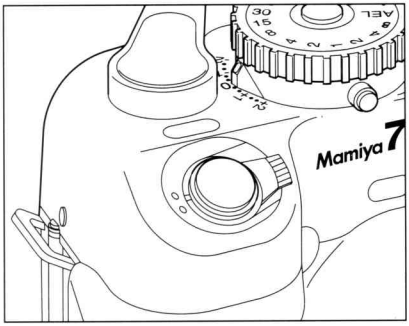

Press the shutter release button when you have focused and determined composition.

★ **Wind the advance lever until it stops. (Otherwise, a red warning Lamp in the viewfinder will signal that it is impossible to press the shutter release button.)**

- **Remove the front lens cap.**
- **Do not advance the film too quickly, as this might adversely affect film flatness, or frame spacing.**
- **While the shutter is functioning do not try to cock the film advance lever, because the film will be moved during exposure.**

2. After completing the last exposure.

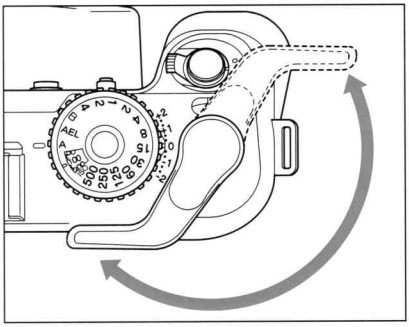

After completing the last exposure, wind the advance lever several times until the film with its backing paper is completely wound onto the take-up spool. The advance lever will become easier to actuate when the film has been completely wound on the spool.

Unloading the film

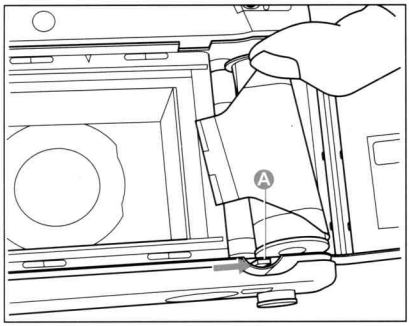

1. The back cover open.

While pressing the back cover lock button, push the back cover open/close button, then the back cover will open.

2. Unloading the film.

Push the spool stud releases lever Ⓐ to the right in order to disengage the spool from the stud.

★ **Simply push the upper rim of the spool with your index finger as shown to lift up the other end of the spool.**

★ **To prepare for another roll, remove the empty spool from the film chamber, and place it in the take-up chamber.**

★ **To remove the film before exposing the entire roll, cap the lens and press the shutter release button and wind the film onto the take-up spool frame by frame.**

★ **For unloading method of Panoramic photographing with 135 mm film, refer to Instruction Manual for 135 Panorama Adapter Kit AD701 (sold separately).**

3. Seal the unloaded film.

Be careful not to let the roll of exposed film unwind. Be sure to seal it immediately.

Handling of Exposed Film

- DO NOT remove exposed film from the camera under direct sunlight. Find a shaded area or turn your back to the sun and shade the camera before you open it.
- Immediately place exposed film in your camera case or a bag, away from sunlight.

AE Lock(AEL) Photography

The AEL position is very useful when making selective exposure measurements of important subject areas which are not in the center of the finder image when faced with difficult lighting conditions.

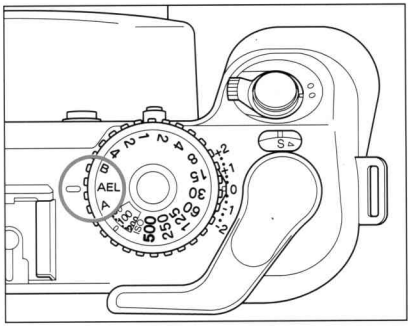

1. Align "AEL" on the shutter speed dial.
Rotate the shutter speed dial until "AEL" aligns with the white index mark on the camera body.

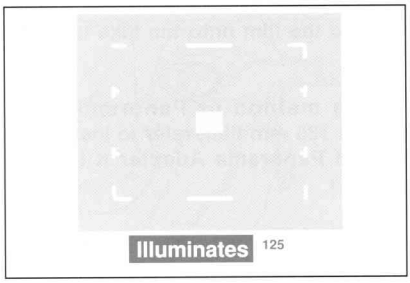

2. Half-pressing the shutter button.
Position the important part of your subject in the central square of the viewfinder — this will establish the correct exposure. Then touch the shutter release button slightly and an LED will light indicating the correct exposure.

3. When changing composition.
In above state, the exposure reading will be memorized. After adjusting for composition as desired, release the shutter.

★ **If you cannot get close enough to your subject for another meter reading make substitute measurements by pointing the camera to light and dark areas and calculate a mean exposure value or try taking a reading off your palm.**

Self-Timer

The shutter is released about 10 seconds after pressing the self-timer button. The LED on the front of the camera illuminates for about 8 seconds, then blinks for about 2 seconds and then the shutter is released.

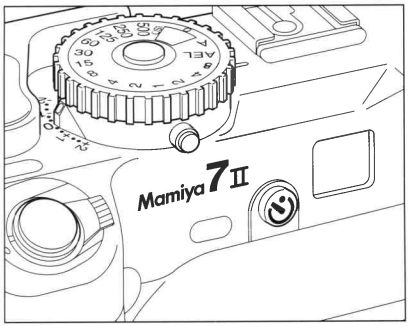

1. Fix the camera to a tripod.

2. Press the self-timer button.
Cock the wind-up lever and press the self-timer button (⏲) The self-timer mode cancels itself automatically.

★ **When the shutter is set to "B" (bulb), the self-timer does not operate.**

★ **To override the self-timer, after having pressed the release, press the self-timer button (⏲) again. Then the self-timer lamp will go out and then the self-timer mode will be canceled.**

★ **When using the self-timer the camera must rest on a steady support.**

Precaution when Self-timer Photographing

■ **When battery check, the self-timer sometimes does not function because of the fact that the amount of the battery to be consumed for shutter release function is different from that of the self-timer functioning. In such a case, replace the battery with a new one.**

Time Exposures

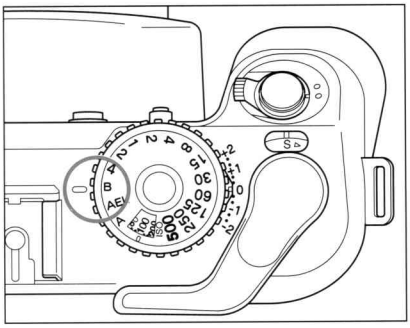

When taking an exposure longer than 4 seconds, set shutter to "**B**" (bulb). At "**B**" the shutter will remain open as long as the release is pressed down.

★ **In order to prevent camera movement it is best to use a cable release and tripod.**

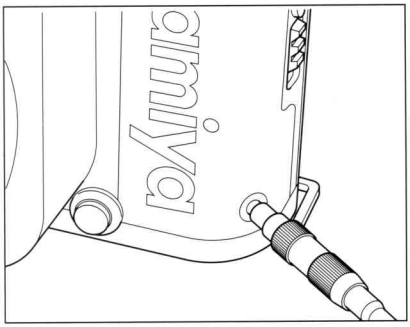

Cable Release Attachment

The cable release can be screwed in the release socket on the lower left side of the body as pictured.

Precautions for Bulb Photographing

■ When bulb photographing, the battery is consumed. A new alkaline manganese battery is durable for about 3 hours, silver oxide battery and lithium battery for about 7 hours.
When the battery is fully consumed, the shutter will be closed automatically.

[Using a tripod]

When using the camera with a large tripod head, the head may interfere with the spool stud, preventing film from being loaded. To prevent this, use the optional tripod adapter N.

■ **The threaded tripod screw hole is 5.5mm deep and the use of a longer tripod screw might result in damaging the camera. So be careful not to apply unnecessary pressure when mounting the camera.**

Flash Photography

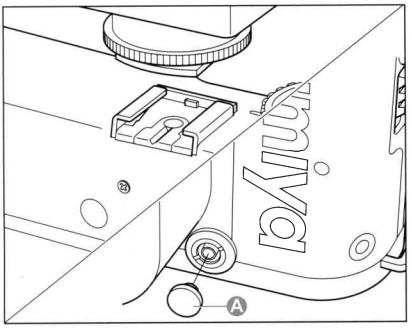

The Mamiya 7Ⅱ features an X synchro flash terminal and its lens shutter system permits flash synchronization at all shutter speeds.
Shoe-mounted flash units can be attached directly to the hot-shoe, while flash brackets can be attached to the tripod socket for larger flash guns.
Remove safety cover Ⓐ to attach sync cord to PC terminal on front left bottom of camera.

[Determining the aperture]

When using automatic flash units, refer to the instructions on the flash unit for correct aperture settings.
When using a manual electronic flash the guide number divided by subject distance gives the correct aperture.

$$\frac{\text{Guide number (32)}}{\text{Subject distance (4m)}} = \text{Correct aperture setting (8)}$$

★ **X contact of this camera is an exclusive contact for strobe.**

★ **Charged electronic flash units sometimes fire when they are attached to the camera. This does not indicate a defective circuit.**

★ **When using electronic flash, be sure to read its manual carefully.**

★ **Be careful, if electronic flash is used at the "A" (Auto exposure) mode, overexposure may occur.**

CAUTION:

- When an electronic flash is connected to the hot-shoe, current moves through the X contact. So be sure to put the safety cover supplied with the camera on the X contact so that you will not receive an electric shock.
- When using strobe, never bring the camera close to human eyes (including all living things), especially little children, because if it is flashed near the eyes, it can cause serious visual trouble.

Multiple exposure mechanism

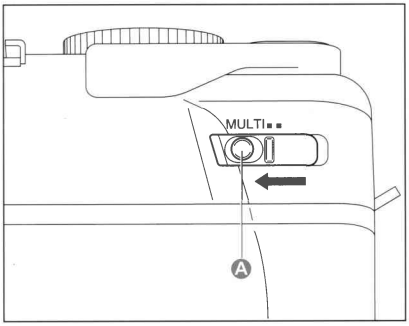

While pressing the lock release button Ⓐ, move the lever in the arrow direction to the multiple exposure position.
It does not matter if the changeover to multiple exposure is made before or after the first exposure. Once changed, the shutter is released and wind-up lever is cocked, but the film counter does not advance.

★ **When taking multiple exposures of subjects with the same brightness, exposure compensation is necessary. When taking multiple exposures of subjects with different brightness, take an exposure of the darker subject first. Then follow with an exposure of the lighter subject.**

★ **After finishing multiple exposure photographing, be sure to return the lever to normal position.**

Infrared Photography

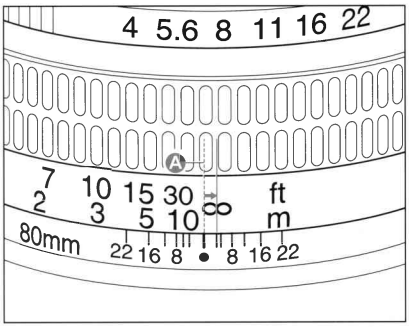

When using infrared film, it is necessary to make a focusing adjustment in order to achieve accurate focus. This is because the focus position of the image deviates from normal since the infrared ray wavelength is longer. After focusing in the usual manner, check the distance on the distance scale that is aligned with the center reference mark Ⓐ of the lens. Make the focusing adjustment by turning the focusing ring in the direction of the arrow in the accompanying photograph so that the distance just observed is aligned with the infrared mark.

★ **When using infrared film, be sure to read the instructions with the film.**

Exposure Compensation

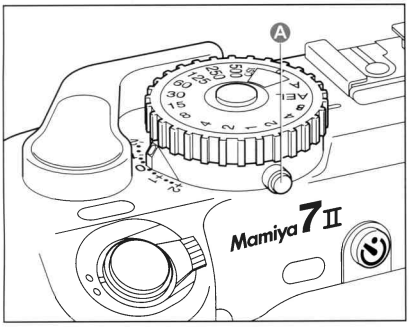

The exposure compensator functions in a number of important ways. It can be used to correct exposure values (EVs) or the differences in brightness between a primary subject and its background —especially when over or under-exposures occur. It can also be used when filters are employed or when engaged in available light photography —or under high contrast conditions (i.e. low or high key).

To set, press the compensator lock release button Ⓐ, and select the desired EV: graduations are 1/3 EV.

[When a filter is used]

Whether using the AE or manual mode simply compensate for the filter exposure factor as indicated in the table below.

Filter exposure factor	×1	×1.2	×1.5	×1.7	×2	×2.5	×3	×4
Exposure compensation value (EV)	0	$+\frac{1}{3}$	$+\frac{2}{3}$	$+\frac{2}{3}$	+1	$+1\frac{1}{3}$	$+1\frac{2}{3}$	+2

★ **After using exposure compensation, be sure to reset to "0".**

Precautions for Using Polarized Light Filter (PL)

As this camera is the rangefinder type, it is impossible to check polarized light effect in the viewfinder. However, it becomes possible to use the filter by means of following procedures.

Be sure to make prior test and check the effect beforehand.

1. Check the polarized light effect position.

Before fitting the PL filter to the lens, apply your eye to the filter and remember the position (a letter or mark mentioned on the filter) or put a mask is on the filter front frame.

2. Fit to the lens.

Fit the filter so that the mark and the like put on the filter front frame will become to the same position.

★ **As the transmitting amount of light differs according to rotating angle of the PL filter, exposure compensation is necessary.**

★ **Make test photographing and calculate the compensation value.**

★ **You may use either a circular type or linear type polarized light filter.**

Diopter Correction Lenses

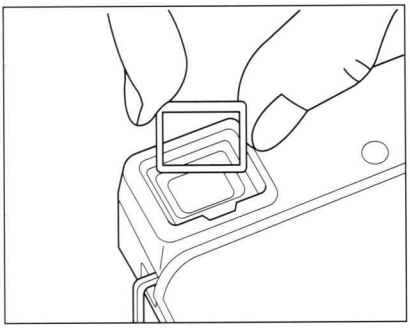

Six types of diopter correcting lenses are available for near/farsighted people. Mount as indicated above. Powers available are: +3, +2, +1, –1, –2, and –3.

+: Far-Sighted
–: Near-Sighted

Depth-of-Field

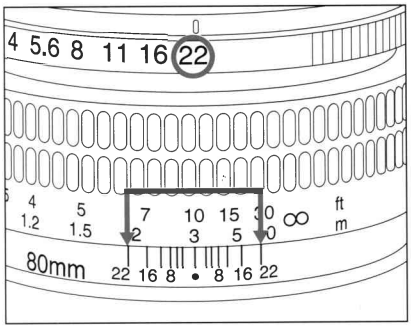

The depth-of-field varies according to the aperture. The smaller the aperture (f/8, f/11, f/16...) the greater the depth-of-field; the larger the aperture (f/8, f/5.6,...) the smaller the depth-of-field. To take pictures which are sharp from foreground to infinity or when taking snapshots, the focusing range is extended or depth increased by using a smaller aperture. When the subject is to stand out, with the background out of focus, a larger aperture is appropriate.
The depth-of-field scale on the lens indicates depth-of-field in terms of the distance between subjects on both sides of the scale. For example, when a 80mm lens is stopped down to f/22, respectively, all objects located within the ranges shown in the illustrations above will be sharp.

★ **Refer to the instructions attached to individual lenses for specific depth-of-field tables.**

How to Hold the Camera

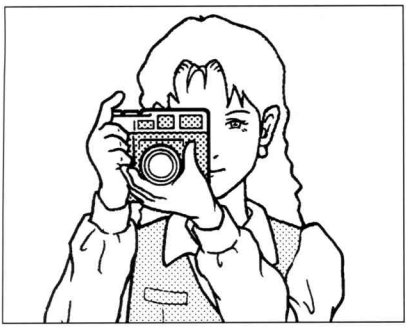

Because most out of focus pictures are the result of camera movement, make sure not to move when pressing the shutter button. Hold the camera with your elbows close to your body: pressing part of the camera on your forehead will help stabilize it. Then gently release the shutter.
When making exposures longer than 1/30 sec., it is advisable to use a tripod with a cable release.

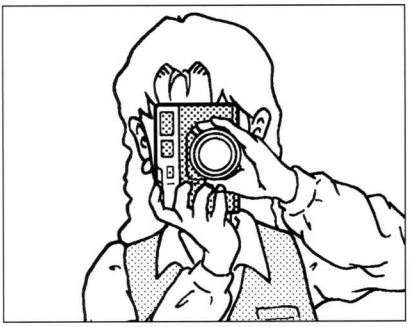

Neck strap

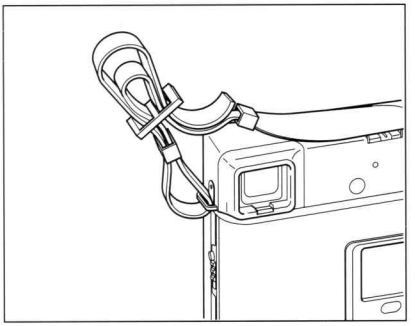

Pass the neck strap through the carrying strap lugs, and fasten it as shown.

TIP:
Be sure to focus the lenses by spanning the lower part of the focusing collar with your fingers, in order not to block the rangefinder window.

Trouble shooting

Uniquely designed to prevent errors. the Mamiya 7 II incorporates numerous safety features.
If the shutter will not function, it is very likely due to user error rather than camera malfunction. Should there be problems, be sure to review the following points.

• When the shutter will not function.

① Is the battery good?

② Is the power on/off lever set to the white dot "ON" position?

③ Has the film been completely advanced to the next frame?
Have all the exposures already been made (10 with 120, 20 with 220)?

④ Has the film advance lever been moved until it stops?

⑤ Is the light shield curtain closed?
(In the case of examples ③ ~ ⑤, the red warning Lamp will flash a warning on the lower left hand comer of the viewfinder.

• When the lens cannot be removed:

Is the light shield curtain open?
The light shield curtain must be closed, and the film advance lever must be advanced and shutter cocked to remove the lens.

• When the film cannot be advanced:

Isn't the multi-exposure lever shifted to "MULTI" position?
Film will not advance if the multi-exposure lever is shifted to "MULTI" position.

N43mm f/4.5L

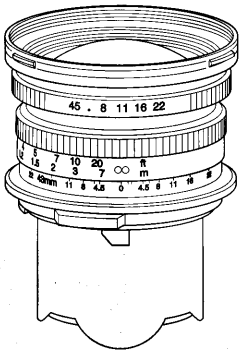

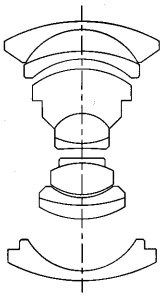

Lens construction	: 10 elements in 6 groups
Angle of view	: 92°
Minimum aperture	: 22
35mm equivalent	: 21mm
Minimum focusing distance	: 1m
Magnification at minimum distance	: 0.049
Area covered	: 1145 x 1421mm
Filter size	: 67mm
Hood	: Bayonet type
Dimensions	: 42 (L) x 72 (D)mm
Weight	: 390g

N50mm f/4.5L

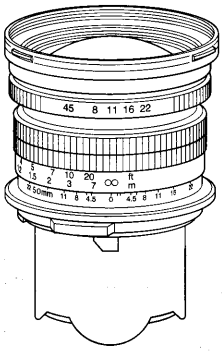

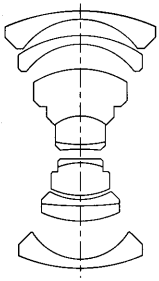

Lens construction	: 10 elements in 6 groups
Angle of view	: 84°
Minimum aperture	: 22
35mm equivalent	: 25mm
Minimum focusing distance	: 1m
Magnification at minimum distance	: 0.063
Area covered	: 895 x 1111mm
Filter size	: 67mm
Hood	: Bayonet type
Dimensions	: 55 (L) x 70 (D)mm
Weight	: 456g

N65mm f/4L

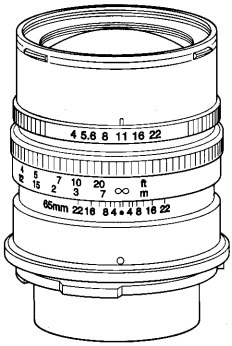

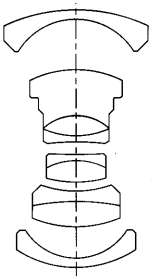

Lens construction	: 9 elements in 5 groups
Angle of view	: 69°
Minimum aperture	: 22
35mm equivalent	: 32mm
Minimum focusing distance	: 1m
Magnification at minimum distance	: 0.078
Area covered	: 719 x 892mm
Filter size	: 58mm
Hood	: Bayonet type
Dimensions	: 65 (L) x 67 (D)mm
Weight	: 380g

N80mm f/4L

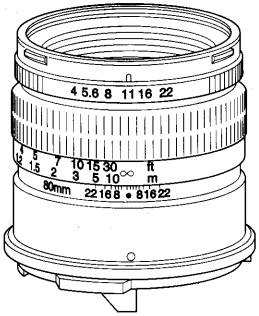

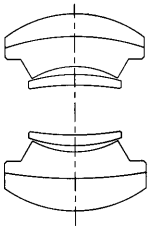

Lens construction	: 6 elements in 4 groups
Angle of view	: 58°
Minimum aperture	: 22
35mm equivalent	: 39mm
Minimum focusing distance	: 1m
Magnification at minimum distance	: 0.097
Area covered	: 580 x 719mm
Filter size	: 58mm
Hood	: Bayonet type
Dimensions	: 56 (L) x 67 (D)mm
Weight	: 290g

N150mm f/4.5L

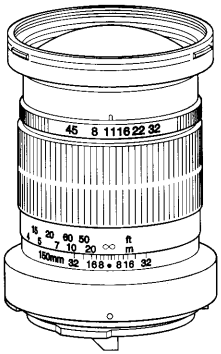

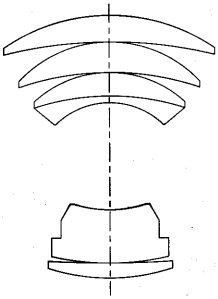

Lens construction	: 6 elements in 5 groups
Angle of view	: 34°
Minimum aperture	: 32
35mm equivalent	: 71mm
Minimum focusing distance	: 1.8m
Magnification at minimum distance	: 0.096
Area covered	: 581 x 721mm
Filter size	: 67mm
Hood	: Bayonet type
Dimensions	: 96 (L) x 70 (D)mm
Weight	: 520g

Lens hood

For 43mm f/4.5: Bayonet type
For 50mm f/4: Bayonet type
For 65mm f/4: Bayonet type
For 80mm f/4: Bayonet type
For 150mm f/4.5: Bayonet type
All are supplied with the lenses.

Diopter correcting Lenses

Focusing accuracy diminishes when the eye diopter is incorrect. So, it is advisable that near and far sighted people use diopter correcting lenses. Fit the proper diopter correcting lens to the eyepiece.
6 types are available: +3, +2, +1, –1, –2, and –3.

Tripod adapter N

This is used to mount the camera to tripod head.
Even when the tripod has a large head, the adapter allows film to be loaded, while the camera is attached to the tripod.

Panoramic Adapter Kit AD701

When using the Panoramic Adapter, a wide panoramic photograph can be taken by using 35mm film. The 135 panoramic Adapter Kit is composed of the following:

① 135 Panoramic Mask

② Take-up Spool

③ Cassette Holder

④ Rewind Crank Unit
(Unit Weight: 110g)

• 135 Panoramic Picture Area and the Number of Exposures.
Picture area: 24mm x 65mm

Number of exposures:
135 Film 36EXP ····· 16
135 Film 24EXP ····· 10

The picture area (24 x 65mm) provided by the Mamiya 7 II panoramic format is 3.3 x larger the 35mm panoramic format (13 x 36mm)

Note: A panoramic paper slide mount 24 x 65mm, is also available.

Lens case Type A

The lens case is made of special material which is very soft but tough and fits 43mm, 50mm, 65mm, 80mm and 150mm lenses.
Dimension: bottom diameter is 90mm and it is 160mm in length.

External Battery Case PE702

Cold temperatures can affect battery power. Permits camera battery to be worn conveniently inside clothing and connected to battery chamber by wire.

Viewfinder FV701 for 43mm f/4.5 lens

See lens instructions booklet.

Viewfinder FV703 for 50mm f/4.5 lens

See lens instructions booklet.

Viewfinder FV702 for 150mm f/4.5 lens

System chart

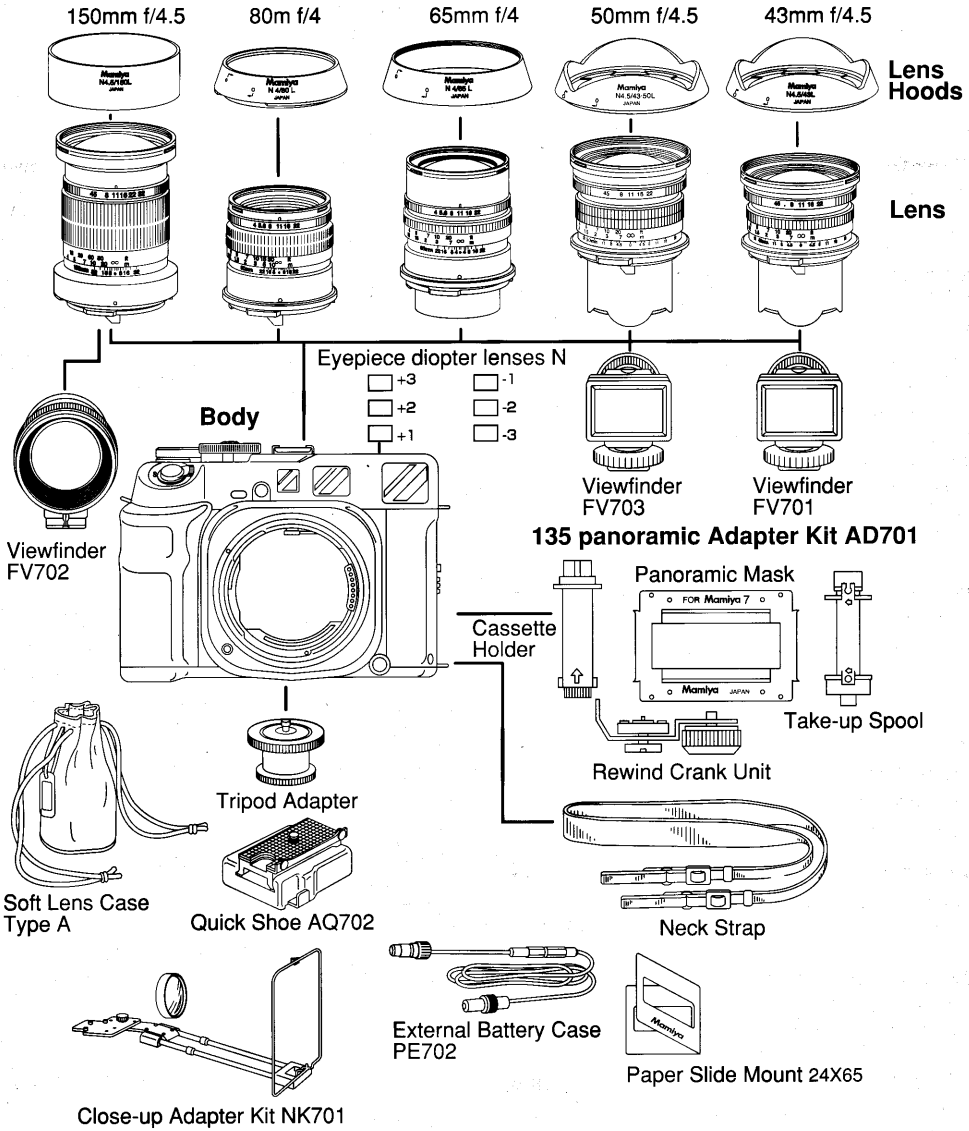

Specifications

Type of Camera	: 6 x 7cm format interchangeable lenses, rangefinder camera, double formats (6 x 7 and 35mm panorama)
Film Used	: 120 Roll Film (10 exposures), 220 Roll Film (20 exposures), 135 Roll Film (16 exposures with 36 exp. film)
Actual Image Size	: 56 x 69.5mm with 120/220 film, 24 x 65mm with 135 film, using Panoramic Adapter Kit
Film winding	: A single 185° stroke
Lens Mount	: Exclusive Bayonet Mount
Lenses	Ultra wide angle : 43mm f/4.5 L with Optical Viewfinder Wide angle : 50mm f/4.5 L with Optical Viewfinder, 65mm f/4 L Standard : 80mm f/4 L Telephoto : 150mm f/4.5 L
Shutter	: #00 electronic leaf shutter, B, 4—1/500sec. ,electro-magnetic shutter release, X-contact synchronizing at all shutter speeds with hot-shoe and PC Terminal; Electronic Self Timer (10 sec. delayed, automatic turn-off)
Multiple exposure	: Possible by means of multi-exposure lever.
Exposure Control	: Aperture priority AE, SPD receptor in viewfinder metering range: EV3- EV18 (with 80mm f/4 lens ISO 100), Exposure compensation: +2 — -2EV (in 1/3EV steps) Film speed range: ISO 25 - 1600
Rangefinder	: Lens declination, double image super imposing system: base length 60mm (effective base length 34.2mm)
Viewfinder	: Coupled with rangefinder: automatic bright line frame indexing (65, 80 and 150mm): parallax compensation: Magnification ratio: 0.57X: 83%* of the field of view visible at infinity: built - in shutter speed and exposure display, safety interlock warning L.E.D. * This information is based on a linear (horizontal/vertical) measurement.
Internal "Dark Slide" curtain	: To permit changing lenses with loaded camera
Safety Mechanism	: 1. Double exposure prevention 2. Shutter release is locked when internal dark slide curtain is engaged. 3. Shutter release button lock lever
Power Supply	: one 6V (4SR44, 4LR44 or 2CR1/3 lithium) battery
Dimensions	: Camera body: 159(L) x 112(H) x 66(D)mm Body with 80mm lens: 159(L) x 112(H) x 120(D)mm
Weight	: Camera body: 920g Body with 80mm lens: 1,210g

• **Specifications and features are subject to change without notice.**

Common Sense Camera Care and Practice

The Mamiya 7 II is a precision optical/mechanical instrument, built for heavy professional use and a long service life, if properly treated and maintained. Please observe these basic caveats:

- Read instructions before using camera.
- Protect camera against shocks and falls. Use neck strap supplied with it, whenever possible.
- Check the battery frequently and always carry spares. The sealed battery supplied with the camera may have been subject to storage conditions which have reduced its service life.
- Be sure to wipe battery contacts before installation and watch correct polarity.
- Battery life differs, depending on frequency of use, type, age, storage condition, ambient temperature (use External Battery Case in very cold weather), etc.
- Always remove the battery (and film) when camera is not used for a period of time.
- Always keep covers on lenses and camera body.
- Do not store the camera at temperatures exceeding 40°C (105°F) and -10°C (15°F). Also avoid humid or sea air environment.
- Prolonged disuse shortens camera life. Periodically exercise the shutter (at different speeds, lens diaphragms and focusing mounts.
- Protect camera against rain and moisture.
- Do not touch lens surfaces. Use blower or lens tissue to remove dust particles.

Specific Suggestions:

- Operate the film advance lever with easy strokes. If moved too rapidly it may affect spacing.
- Hold lens focusing mounts on bottom in order not to block range finder window.
- Always test your equipment before going on important assignments.

The Importance of Proper Maintenance

Your camera has mechanisms like film transport, shutter and diaphragm blades, rangefinder couplings, etc. They are controlled by gears, levers, springs, and so on. All require special lubrication from time to time. Ambient conditions can also affect these mechanisms, as well as the electronic components and the optical glass of your lenses. We therefore suggest that you have your camera and lenses checked, and if necessary serviced, periodically.

Batteries Care

1. The sealed, new battery which is supplied with this camera may have been subject to storage conditions which have reduced its service life. Therefore it is desirable to replace it with a fresh battery as soon as possible.

2. Carefully wipe the battery contacts before inserting into the chamber. Failure to do so may result in poor electrical contact and consequent malfunctioning of the camera.

3. Always remove battery when camera is not used for a while. Always carry spare batteries.

4. Battery life differs, depending on type, age, storage condition, ambient temperature, frequency of use etc.

5. Be sure to match the poles of the battery with those shown in the diagram in the chamber.

6 Always keep batteries out of the reach of children and never throw used batteries into a fire or expose to excessive heat.

7. When going on trips be sure to carry spare batteries to ensure that the camera will function. Also, as batteries tend to temporarily malfunction at temperatures below freezing, when photographing in extremely cold climates, carry the External Battery Case.

8. When you carry spare batteries, leave them in the original factory packaging. If they are "unpackaged", be sure to wrap them carefully in order to prevent them touching each other or any metal objects which can cause them to short circuit and become useless.